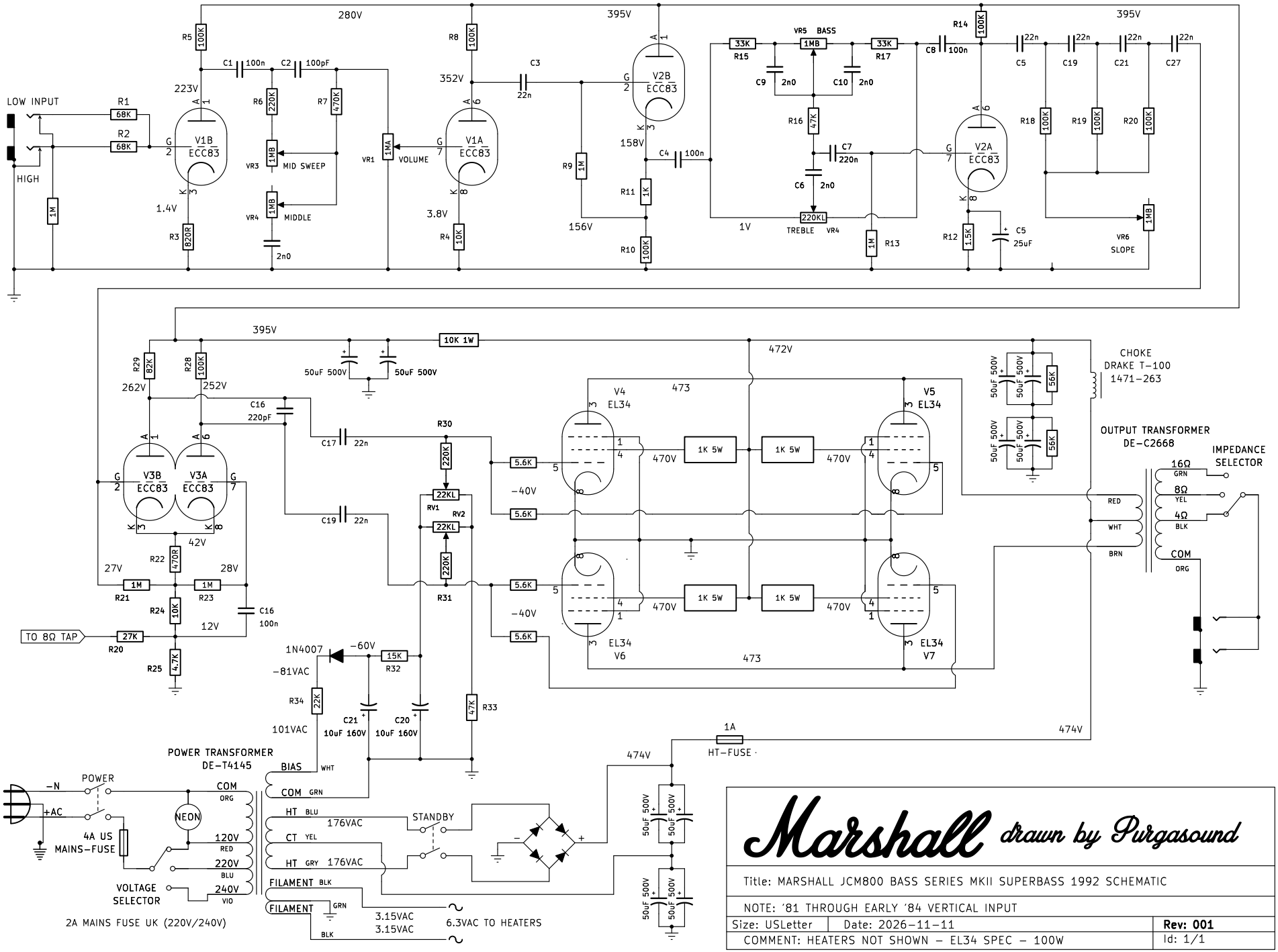

Marshall drawn by Purgasound

Title: MARSHALL JCM800 BASS SERIES MKII SUPERBASS 1992 SCHEMATIC

NOTE: '81 THROUGH EARLY '84 VERTICAL INPUT

Size: USLetter	Date: 2026-11-11	**Rev: 001**
COMMENT: HEATERS NOT SHOWN – EL34 SPEC – 100W		Id: 1/1

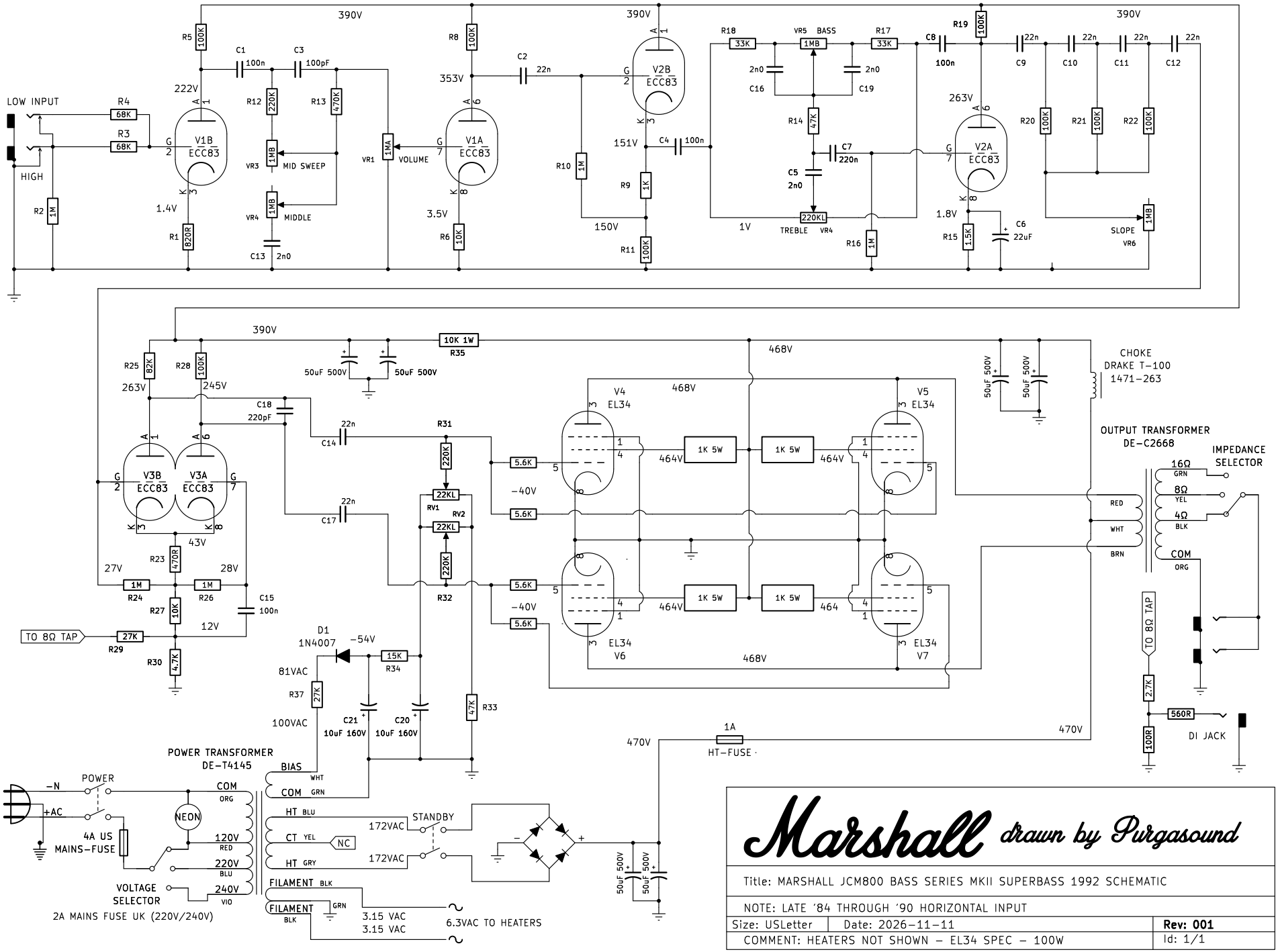

Marshall drawn by Purgasound

Title: MARSHALL JCM800 BASS SERIES MKII SUPERBASS 1992 SCHEMATIC

NOTE: LATE '84 THROUGH '90 HORIZONTAL INPUT

Size: USLetter | Date: 2026-11-11 | **Rev: 001**

COMMENT: HEATERS NOT SHOWN – EL34 SPEC – 100W | Id: 1/1

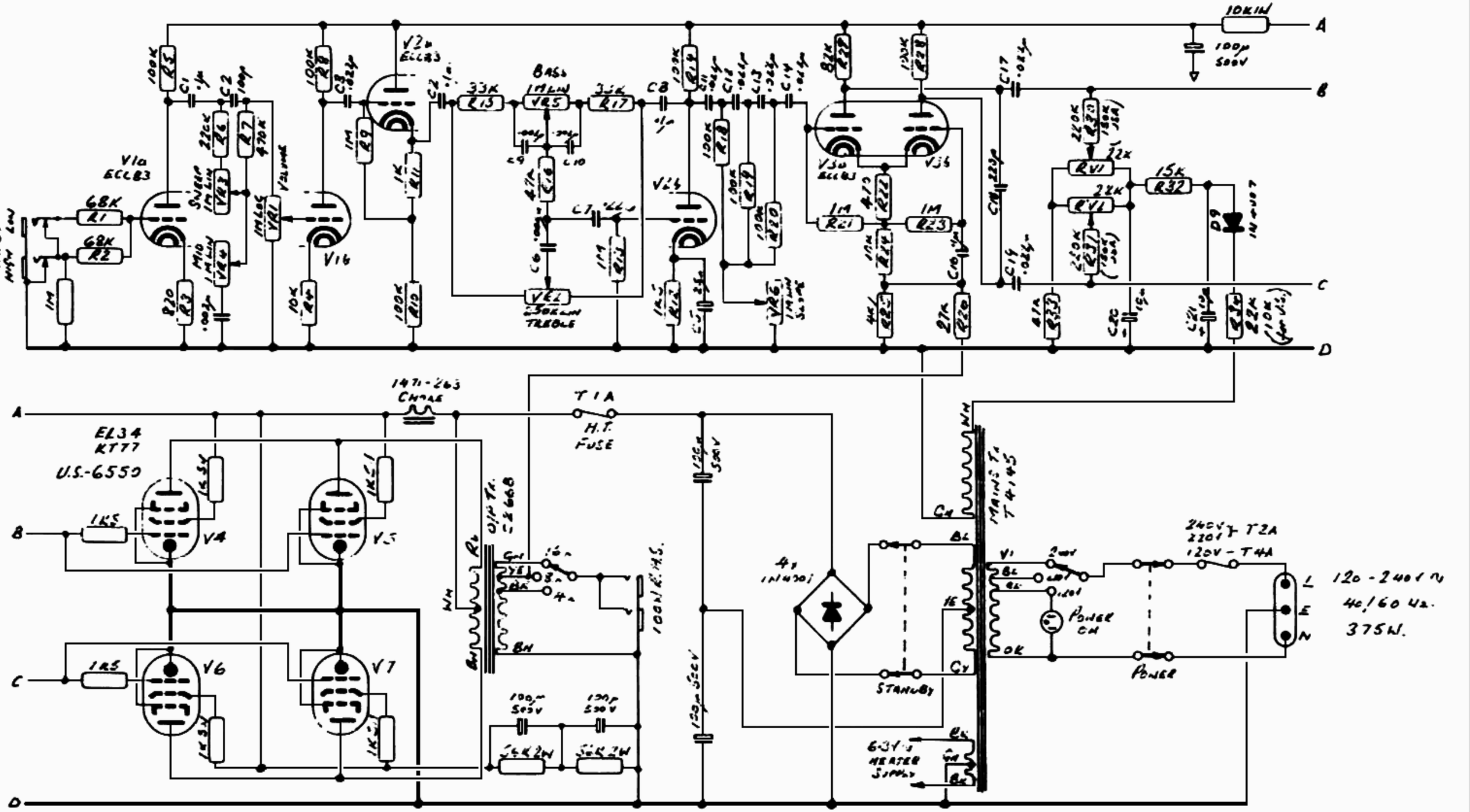

Marshall JCM 800 Series Model 1992 100W BASS AMP — CIRCUIT DIAGRAM

1	23-4-81	SG

© JIM MARSHALL PRODUCTS LTD BLETCHLEY ENGLAND.